Overview of Mechanism and Mitigation Measures on Multi-frequency Oscillation Caused by Large-scale Integration of Wind Power

Yongning Chi, Bingjie Tang, Jiabing Hu, *Senior Member, IEEE*, Xinshou Tian, Haiyan Tang, Yan Li, Sujuan Sun, Lei Shi, and Lei Shuai

***Abstract*—In recent years, the large-scale integration of renewable energy sources represented by wind power and the widespread application of power electronic devices in power systems have led to the emergence of multi-frequency oscillation problems covering multiple frequency segments, which seriously threaten system stability and restrict the accommodation of renewable energy. The oscillation problems related to renewable energy integration have become one of the most popular topics in the field of wind power integration and power system stability research. It has received extensive attention from both academia and industries with many promising research results achieved to date. This paper first analyzes several typical multi-frequency oscillation events caused by large-scale wind power integration in domestic and foreign projects, then studies the multi-frequency oscillation problems, including wind turbine's shafting torsional oscillation, sub/super-synchronous oscillation and high frequency resonance. The state of the art is systematically summarized from the aspects of oscillation mechanism, analysis methods and mitigation measures, and the future research directions are explored.**

***Index Terms*—High-frequency resonance, multi-frequency oscillation, sub-synchronous oscillation, super-synchronous oscillation, wind power integration.**

I. Introduction

In recent years, wind power generation has developed rapidly in China due to its mature technology and huge potential for development. By the end of 2017, the cumulative installed capacity of wind power in China has reached 164 GW, and the energy share of wind power is 9.2% of total installed generation capacity [1]. Wind power resources in China are primarily concentrated in the Northwest, Northeast and North of China. In Gansu and Ningxia provinces, renewable energy generation, including wind and solar power, is the second largest power source in the local power grid. The installed capacity of renewable energy has reached 40.7% and 39.9% in 2017 in Gansu and Ningxia respectively.

Wind power generation is based on power electronics technology. With the large-scale integration of wind power and the widespread application of power electronic devices in transmission, distribution, and consumption, the level of modernization and penetration of power electronics in power systems is increasing, which has profoundly changed the grid's dynamic behavior. On the one hand, power electronics technology makes the power supply more controllable, but on the other hand, power electronic devices have the disadvantages of low-inertia, and being vulnerable to grid disturbance, which brings new stability problems to the power system. One of the most disturbing problems is the Multi-frequency Oscillation (MFO) problems covering multiple frequency segments, including wind turbine's Shafting Torsional Oscillation (STO), Sub-synchronous Oscillation (SSO), super-synchronous oscillation, and High Frequency Resonance (HFR). In recent years, there have been many MFO events caused by large-scale wind power integration occurring in domestic and foreign projects, which seriously threaten the safe and stable operation of power systems and restrict the consumption of renewable energy. Some significant issues, such as the mechanism, analysis methods, prevention, and mitigation measures of MFO, have attracted wide attention from academia to industry. CIGRE (International Council on Large Electric systems) had recently established a new working group C4.49, the working group's objective is to analyze and explain the multi-frequency stability problems of converter-based modern power systems. Furthermore, some scholars are paying attention to the Low-frequency Oscillation (LFO) characteristics in large-scale integrated wind power systems, and analyzing the system oscillation mode after wind turbines replaced the same capacity thermal power units [2], [3]. The influence of wind power on small-signal angular stability is also studied [4].

The construction of "grid-friendly" wind farms is the development trend in the renewable energy industry. In order to conduct a comprehensive review on the MFO problems caused by wind power integration, this paper first elaborates on several typical MFO incidents in grid operations and summarizes their

Manuscript received May 27, 2019; accepted June 21, 2019. Date of publication December 30, 2019; date of current version November 4, 2019. This work was supported by the National Natural Science Foundation of China (No. 51577174).

Y. N. Chi, B. J. Tang (corresponding author, e-mail: tbjjtbj@163.com), X. S. Tian, H. Y. Tang, and Y. Li are with the State Key Laboratory of Operation and Control of Renewable Energy & Storage Systems, China Electric Power Research Institute, Beijing 100192, China.

J. B. Hu is with Huazhong University of Science and Technology, Wuhan 430074, China.

S. J. Sun and L. Shi are with NARI Group Corporation, Nanjing 211000, China.

L. Shuai is with Siemens Gamesa Renewable Energy A/S, Brande 7330, Denmark.

DOI: 10.17775/CSEEJPES.2019.01100

2096-0042 © 2019 CSEE

characteristics and commonalities. Then, the state of the art of MFO is systematically summarized including the aspects of oscillation mechanism, analysis methods, and mitigation measures. Finally, this paper explores future research directions.

II. Multi-frequency Oscillation Incidents in Grid Operations

This section introduces several typical MFO incidents in domestic and foreign grid operations.

A. Shafting Torsional Oscillation Incidents

The STO of Doubly-fed Induction Generator (DFIG)-based wind turbines occasionally occur in wind farms, with oscillation being caused by torsional vibration between mass blocks in the turbines. The detected waveforms of wind turbines are shown in Fig. 1. There are about 1.4 Hz oscillation components in generator speed, torque command, and electromagnetic torque. The repeated tightening and relaxation of the drive shaft will cause damage to the turbines' mechanical shaft. Meanwhile, the STO frequency is very close to the LFO in the power system. Consequently, the resonation between the STO mode and LFO mode can worsen the stability margin of the converter-grid system, eventually, even destabilizing the system.

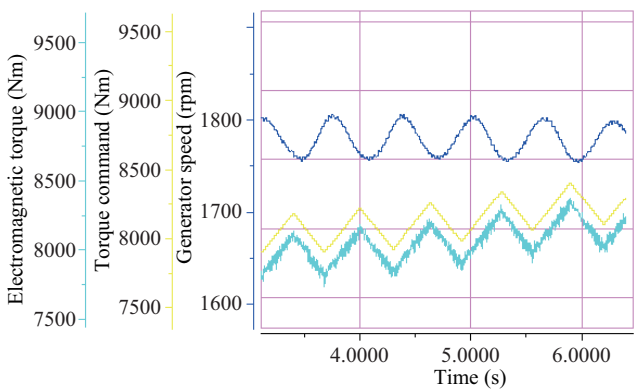

Fig. 1. Shaft torsional oscillation of DFIG wind turbines occurred in a wind farm.

B. Sub-synchronous Oscillation Incidents

The SSO event caused by wind power first occurred in a DFIG-based wind farm in southern Texas in October 2009 [5]. When the wind farm is directly connected to the grid through a high compensation level line, the interaction between the wind turbines and the series compensated transmission line resulted in SSO (about 20 Hz) in line current and voltage. As the oscillation amplitude continued to increase, it eventually led to the turbines' trip and damage of the crowbar protection circuit. The follow-up studies showed that this new phenomenon is different from the traditional SSO related to synchronous generators' shaft torsional vibration, it is a new SSO problem named Sub-synchronous Control Interaction (SSCI) caused by the interaction between a power electronic control device of the wind turbine and a series compensated system [6].

Since 2011, hundreds of SSO (current frequency range from 3 to 10 Hz, and active power frequency range from 40 to 47 Hz) events have occurred in the Hebei Guyuan wind power system, which has caused thousands of wind turbines to be cut-off [7]. DFIG-based wind farms in the Guyuan area are radially connected to 220 kV substations, and then the wind power is exported through 500 kV series-compensated transmission lines. The recording of the active power waveform of a SSO event happened in 2013 and is shown in Fig. 2. The amplitude of active power increased rapidly, and the growing oscillation caused a large number of wind turbines to be tripped off. The oscillation does not stop until the series compensation capacitor is bypassed, a total of 145 MW power was lost in this accident.

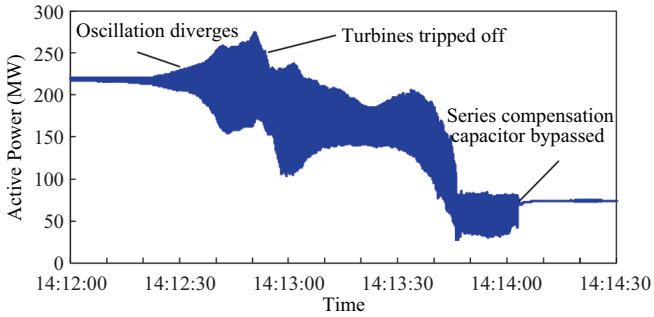

Fig. 2. Power oscillation recording of the Guyuan wind farm.

In July 2015, a SSO accident occurred in a Permanent Magnet Synchronous Generator (PMSG)-based wind farm in the Xinjiang Hami area without a series compensation capacitor in the transmission line. The oscillation tripped off thermal power units located 300 kilometers away [7]. The frequency variation of SSO in line current is shown in Fig. 3. As illustrated by the blue curve, the oscillation frequency of the current is time-varying, ranging from 17 Hz to 23 Hz. Red and green dotted lines represent the fundamental complementary frequency of the shaft torsional modes in two thermal plants, respectively. In time 11:50-11:55, the frequency of the current generated by PMSG is coupled with the thermal plant's shaft torsional frequency, resulting in the shaft torsional vibration. The thermal power units were tripped lastly.

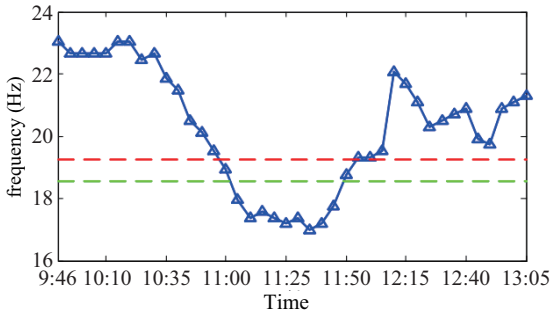

Fig. 3. Sub-synchronous current frequency of wind farms in Xinjiang.

SSO accidents also occurred in a PMSG-based offshore wind power plant in England [8]. The power output from the wind farm in total installed capacity of 402 MW is

transmitted to shore via two submarine cables approximately 47 km in length. SSO occurred when one of the offshore submarine cables was out of service. With the increase of power export, it was observed that a SSO with frequency around 8.5 Hz gradually appears, and oscillation amplitude increased continuously with the increase of output power. Detailed analysis shows that the wind farm was connected into an extreme weak grid, the strong interaction between the turbines' controller and weak grid resulted in eigenvalues existing in the right half plane, leading to instability of the system.

Voltage Source Converter-based High-voltage Direct Current Transmission (VSC-HVDC) is an ideal solution to the problem of large-scale and long-distance transmission of offshore wind power, but a SSO accident still occurred in an offshore DFIG-based wind plant in Guangdong Nan'ao, when the wind power was transmitted to land via a VSC-HVDC system [9]. Recorded waveforms are given in Fig. 4 [10]. After the oscillation occurs, AC voltage and DC voltage are basically stable. The frequency of the AC current in the wind farm is about 20 Hz, and the frequency of the DC current is about 30 Hz, and the two frequencies are complemented by the nominal system frequency (50 Hz) to each other. The oscillation diverged slowly, which eventually triggered protection of the VSC-HVDC system and resulted in an outage of the converter station.

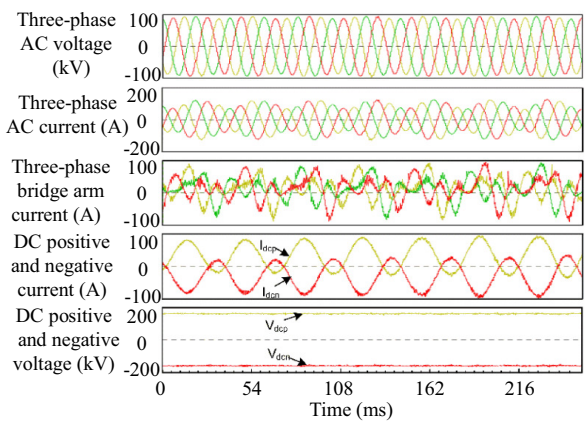

Fig. 4. Recorded waves of sub-synchronous oscillation in the Nanao VSC-HVDC project.

C. High Frequency Resonance Incident

An offshore wind farm in project BorWin1 in Germany was using VSC-HVDC technology to transfer wind energy from sea to land [11]. Due to the interaction between the power electronic converters in the VSC-HVDC and AC grid, there have been several HFR events happening with frequencies approximately ranging from 250 Hz to 350 Hz. A measured highly distorted current is given in Fig. 5.

D. Characteristics

The MFO accidents happened in power systems with high penetration of wind generation has the following characteristics:

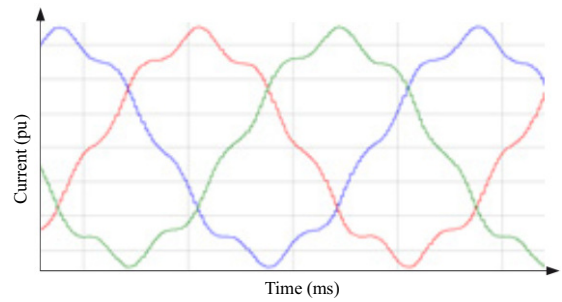

Fig. 5. Current waveform detected in BorWin1 project.

1) The oscillation frequency is diverse, covering broad bandwidths ranging from several Hz to kHz. And the frequency has time-varying features as the system operating conditions or parameters change.

2) Power electronic devices are involved in the formation of oscillation, which is affected by the dynamic interaction between power electronic converters and the grid or the control interaction between nearby power electronic converters. The influencing factors of oscillation are complicated.

3) The torsional vibration frequency of wind turbines' mechanical shaft is low, and the shaft plays an irrelevant part in the SSO problem of the wind power integrated system, which is essentially different from traditional rotating shafting-dominated oscillation in synchronous generators.

4) The application of cables in offshore wind farms decreases the resonance frequency, causing it to enter the control bandwidth of power electronic devices, which increases the risk of instability.

5) Due to the capacity limitation of power electronic converters, MFO could enter nonlinear sustained oscillation originated by small-signal negative-damping operations.

III. Mechanism of Multi-frequency Oscillation

MFO caused by wind power integration is a new problem that has only appeared in recent years, and overall research is still in a developing stage. There have been some research results concerning the mechanism of MFO, and the following section will give a general review of the mechanisms on STO, sub/super-synchronous oscillation, and HFR problems.

A. Shaft Torsional Oscillation

At present, DFIG, PMSG, and the Squirrel Cage Induction Generator (SCIG) are widely used in wind farms. The mechanical shaft system of DFIG and SCIG consists of a wind turbine, low/high-speed shaft, gearbox and generator. The turbine speed is low, while the generator speed is high, so the gearbox connecting the two is an elastic connection and it has low equivalent stiffness. PMSG's mechanical shaft system only contains three parts: the wind turbine, low-speed shaft and generator, but its multi-pole structure also makes the mechanical shaft have a low equivalent stiffness [12].

STO refers to the abnormal oscillation phenomenon of the flexible mechanical shaft after disturbance. This shaft oscillation involves electrical and mechanical parts, which will affect the dynamic stability of wind turbines and cause the

oscillation of the active power output. Shaft oscillation caused by a small disturbance usually has a small amplitude and short duration. When a serious grid fault occurs, large disturbances may cause the shaft system to develop a continuous torsion or even instability. The torsional vibration frequency of the wind turbines' mechanical shaft is relatively low (2 MW DFIG is about 1.67 Hz [13]), which has the possibility of causing LFO in the power system. Continuous torsional vibration will also cause fatigue load in the turbines and affect the service life of the turbines as well.

Current research on the mechanism of STO primarily includes two viewpoints: negative damping effect and forced oscillation caused by wind shear and the tower shadow effect.

1) Negative damping effect refers to the fact that the active power controller in the converter introduces weak or negative damping in the turbines' shaft control, which deteriorates the damping characteristics of the mechanical shaft system [14], [15].

2) Wind shear effect refers to the influence on capturing the power of the turbines due to the characteristics of wind speed varying with height. Tower shadow effect refers to the influence on capturing the power of the turbines as the tower blocks the wind [16]. Wind shear effect and tower shadow effect cause the mechanical power of the wind turbines to contain periodic third harmonic power pulsations. When the frequency of the pulsation is close to the torsional vibration frequency of the wind turbines, it will act as a disturbance source to cause resonance.

B. Sub/super-synchronous Oscillation

SSO phenomenon was first observed in thermal power plants. In 1970, Sub-synchronous Resonance (SSR) occurred in the Mohave Generating Station, which caused serious shaft failure of the steam turbine generators. In 1977, a SSO accident related to HVDC occurred in the Square Butte Generating Station. A great deal of research has been done on SSO in academia and industry after these accidents happened. IEEE had set up a special working group which defined the SSO problems into two types [17]:

1) SSR. SSR problem primily refers to the interaction between the torsional modes of the steam turbine-generator and the series capacitor compensated lines. There is an electrical L-C resonant circuit which exists in SSR problems.

According to the causes and effects of SSR, it can be further divided into three types: Induction Generator Effect (IGE), Torsional Interaction (TI), and Torque Amplification (TA). IGE refers to the self-excited phenomenon in electrical systems. As the rotor resistance viewed from the armature terminal is negative with sub-synchronous armature currents, if the negative resistance exceeds the sum of the grid and stator resistance, it will lead to the continuous divergence of the resonance. TI means that when the LC resonance frequency in the electrical system is complementary to the torsional natural frequency of the shaft, the mutual excitation between the electrical and mechanical systems will cause a torque reinforced oscillation when the system is disturbed by small disturbances [18]. TA means that after a significant system disturbance, if the frequency of the transient component in the generator is complementary to the torsional natural frequency, it will result in a growing oscillation in the shaft caused by corresponding electromagnetic torque [19].

2) Device dependent SSO. The device dependent SSO problem is caused by the interaction between a turbine-generator and a fast acting controller of the power system devices, and no electrical resonance circuit exists in this problem. Generally speaking, a device that responds rapidly to power or speed variations in the sub-synchronous frequency range is a potential source of device dependent SSO.

In recent years, with the rapid development of wind power generation technology and the widespread application of power electronic devices in power systems, new types SSR/SSO problems caused by wind power integration have emerged [20]. Wind turbines are power electronic interfaces, and the mechanical natural frequency of the shaft is low. This makes the new type SSR/SSO caused by wind power integration very different from the traditional SSR/SSO of steam-turbine generators. And the mechanism of SSO caused by different types of wind turbines is also different. In addition to the SSO caused by wind farms directly connected to the AC grid, a new power oscillation caused by wind farms connected through VSC-HVDC has also been observed in projects. The oscillation mechanism of these oscillation phenomena is discussed separately below.

1) Sub-synchronous Oscillation Caused by DFIG

The schematic diagram of the mechanism on SSO caused by DFIG wind turbines is shown in Fig. 6. The negative damping effect of sustained oscillation is partly caused by the IGE between wind turbines and series capacitor compensated lines and partly caused by the SSCI involving power electronic converters.

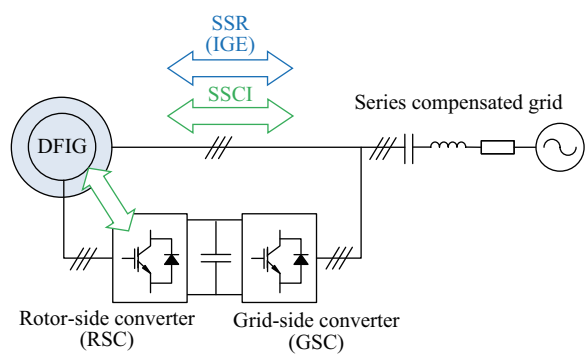

Fig. 6. Schematic diagram of mechanism on SSO caused by DFIG.

The electrical natural resonant frequency ($\omega_{\rm er}$) in a series-compensated grid is given by:

$$\omega_{\rm er} = \omega_0 \sqrt{\frac{X_{\rm C}}{X_{\rm L}}} \tag{1}$$

where ω_0 is synchronous angular frequency, $X_{\rm C}$ is reactance of the series capacitor, $X_{\rm L}$ is total reactance including wind turbine, line, and transformers.

For DFIG, the slip $s_{\rm er}$ at this sub-synchronous frequency is given by:

$$s_{\rm er} = \frac{\omega_{\rm er} - \omega_{\rm r}}{\omega_{\rm er}} \tag{2}$$

where ω_r is the rotor rotating angular frequency.

In general, ω_r is larger than ω_{er}, thus the equivalent resistance of the rotor converted to the stator side is negative, which introduces negative damping to the system.

SSCI is caused by the rapid response of the Rotor-side Converter (RSC) to the current changing [21]. When the sub-synchronous frequency component exists in the stator current, the corresponding current will be induced in the rotor and increased under RSC control. The fast control of the RSC current inner loop exacerbates the degree of negative damping. So the SSO caused by DFIG is not only affected by the parameters of the electrical system, but also closely related to the control parameters of the power electronic converters.

2) Sub-synchronous Oscillation Caused by PMSG

The mechanism of PMSG causing SSO can be explained under the background of the SSO accident which happened in Xinjiang Hami, as shown in Fig. 7. This area is a typical example of a large-scale integrated wind power system with a small local load and no conventional power supply nearby. PMSG is connected to the grid through full power electronic converters, so the generator is not coupled with the grid. Moreover, there is no series compensation in the transmission line and no L-C resonant circuit exists in this system. So this problem cannot be classified into a SSR problem, which is different from SSO caused by DFIG.

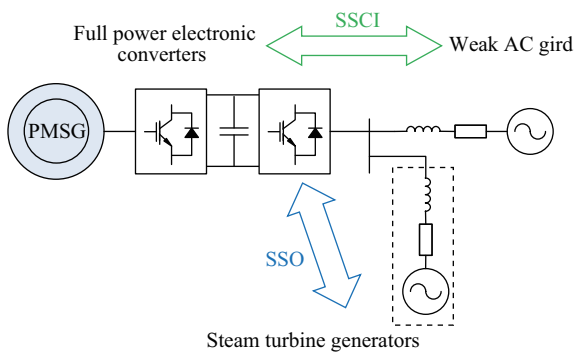

Fig. 7. Schematic diagram of mechanism on SSO caused by PMSG.

Literature [23] indicates that PMSG behaves as a capacitive reactance with a negative resistance in the sub-synchronous frequency range caused by the control of power electronic converters. PMSG presents a capacitance characteristic, and together with the weak AC grid, constitutes the equivalent resonance circuit. The SSCI between PMSG and grid leads to oscillation, and due to the equivalent negative resistance, the oscillation will continue to diverge. In the end, the control system of PMSG wind turbines will maintain the oscillation in a constant amplitude oscillation.

In this problem, The potential threat to adjacent thermal power units gets more attractions. If the frequency of the sub-synchronous current generated by SSCI stays near the complementary torsional natural frequency of the steam turbine generator for a certain period of time, it will cause the oscillation of the turbine-generator shaft system. It can be seen as SSO caused by power electronic converters, which seriously affects the normal operation of the thermal power units.

3) Super-synchronous Oscillation

Figure 8 is a current spectrum analysis of the sub/super-synchronous oscillation observed in the Hebei Guyuan wind farm [22]. It can be seen that the current includes not only the sub-synchronous component in 8.1 Hz but also the super-synchronous component in 91.9 Hz with a small amplitude.

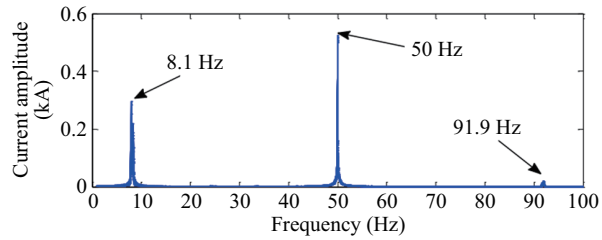

Fig. 8. Sub/super-synchronous oscillation current spectrum in Hebei Guyuan wind farm.

In literature [23], the sub/super-synchronous oscillation of a PMSG-based wind farm connected to a weak AC grid is simulated. Fig. 9 is the spectrum analysis diagram of current and active power [24]. The amplitudes of the sub-synchronous component in 19.24 Hz and super-synchronous component in 80.76 Hz in the current are very high, and the amplitude of the super-synchronous component even exceeds the nominal frequency component. It was also found that in the super-synchronous frequency range, PMSG also behaves with the characteristics of capacitive reactance with a negative resistance.

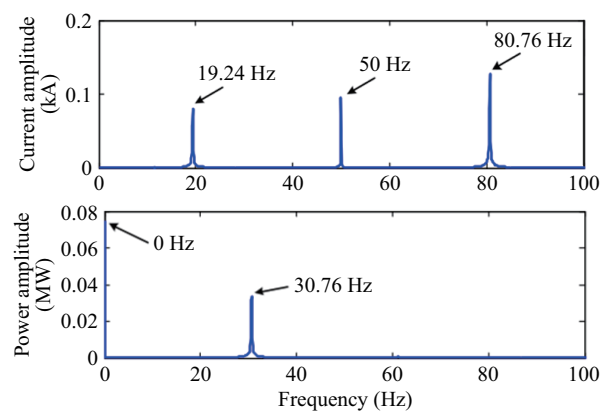

Fig. 9. Spectrum of sub/super-synchronous oscillation in Xinjiang Hami.

Literature [25] analyzes the PMSG response process to grid harmonics, it is found that when there is sub-synchronous harmonic ω_{er} in PMSG, induced new components of ω_{er} and $(2\,\omega_0 – \omega_{er})$ frequencies will be superimposed with the original disturbance due to the positive feedback of the converters' control.

4) Sub-synchronous Oscillation Caused by Wind Power Integration through VSC-HVDC

The control of wind turbines and VSC-HVDC systems are based on power electronic converters. Rapid control characteristics of power electronic converters and the control interaction between power electronic devices are the fundamental reasons for system oscillation [26].

1) Because the controller parameters have a wide range of values and are not limited by physical component parameters, the frequency-domain impedance characteristics controller presented can be capacitive, inductive or even negative resistance with the change of frequency [27].

2) The controller parameters of wind turbines and VSC-HVDC systems are designed to satisfy their dynamic and static performances when they are operated separately, but the stability of the interconnected system cannot be guaranteed [28].

Based on the above reasons, the mechanism of SSO caused by wind power integrated through a VSC-HVDC system can be summarized as that of a interconnected system which has a resonance point in the sub-synchronous frequency range, and has negative damping at the resonance frequency, which causes the system to oscillate continuously. Literature [29] analyzes the frequency-domain impedance characteristics of a PMSG-based wind farm and VSC-HVDC interconnected system. The impedance curve has an intersection point in the sub-synchronous range, and the corresponding phase margin was close to or less than zero, which led to the occurrence of SSO in the interconnected system. When SSO occurs in a DFIG-based wind farm connected to a series compensation AC network, it's believed that the main source of negative damping is from control of the RSC. However, when SSO occurs in a DFIG-based wind farm and a VSC-HVDC interconnected system, the main factor affecting oscillation is control of the Grid-side Converter (GSC) [30].

C. High-frequency Resonance

Compared with a traditional L filter, a LCL filter has been widely used in grid-connected converters because of its better filtering characteristics and lower cost. However, a LCL filter is a third-order multivariable system. The amplitude-frequency characteristics of a grid-connected system using a LCL filter have a resonance peak, which easily causes the grid-connected converter to resonate. In addition, shunt capacitors are widely used in power systems as reactive power compensation and power factor enhancement equipment. When wind turbines are connected to a AC weak grid with shunt compensation capacitors, there is a risk of HFR caused by the interaction between DFIG wind turbines and parallel compensated weak grids. The frequencies of HFR are generally between 300 Hz to 2000 Hz, and its simulation waveform is shown in Fig. 10 [31].

Literature [32] analyzes the mechanism of HFR as shown in Fig. 11, where detailed impedance models of the DFIG system Z_{DFIG} and shunt compensated weak grid Z_{SYSTEM} are established. Through analysis of the impedance model bode diagram, it is found that in the high frequency range, the two impedances may have a phase difference of 180 degrees and cause high frequency resonance at the intersection point. Literature [33] also points out that when the LCL filter parameters are unreasonably set, it will cause HFR between the rotor part and grid part of the DFIG. In reference [34], the resonance mechanism is analyzed from the perspective of discrete control. It is concluded that the reason of instability is the hysteresis caused by the controller's operation time which affects the phase-frequency characteristics of the system.

In the BorWin1 project, HFR phenomenon caused by a wind farm integrated through a VSC-HVDC system has also occurred. The interaction between the VSC-HVDC and AC network is considered to be the main cause of oscillation [27]. It has also been shown that the wide control bandwidth of wind turbines' GSC will increase the resonant frequency and cause oscillation of the interconnected system in the high frequency range [30]. However, there is not much research on this problem, and the mechanism has not been explained lucidly.

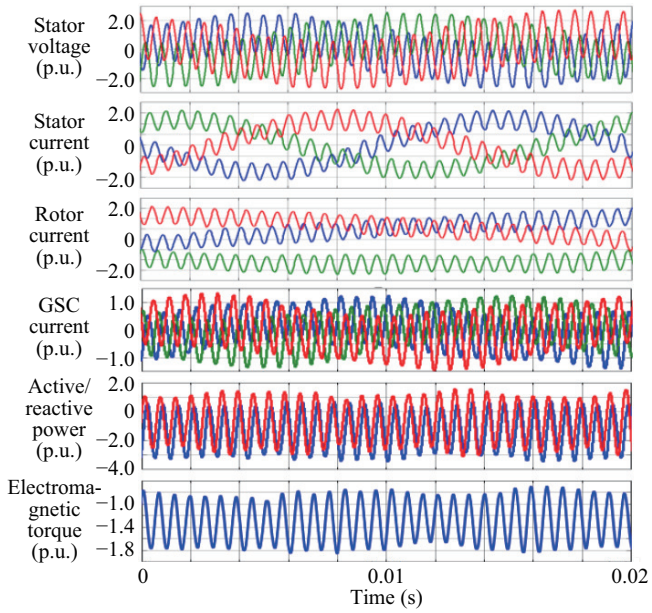

Fig. 10. Simulation results of HFR.

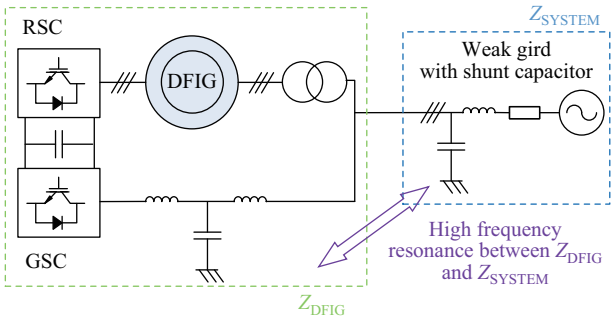

Fig. 11. Schematic diagram of the mechanism of HFR.

IV. Analysis Methods for Multi-frequency Oscillation

This section primarily provides a general introduction about oscillation analysis methods for power systems with high wind power penetration.

A. Eigenvalue Analysis Method

The eigenvalue analysis method is the most widely used method for system stability analysis. By linearizing nonlinear equations at a given stable operating point and solving the state matrix, a lot of information such as eigenvalues, eigenvectors and participation-factors can be obtained [35].

The eigenvalue analysis method is often used in the study of STO and SSO: Oscillation stability can be judged by the real part of the eigenvalue, and the frequency of oscillation can be obtained by the imaginary part of the eigenvalue [8], [14]. The key parameters affecting the oscillation mode can be determined by observing the movement trend of the eigenvalue locus [36]–[38] or by quantitative analysis of the eigenvalue sensitivity and participation-factors [39].

The eigenvalue analysis method has a strict theory approach and provides sufficient information about the oscillation mode with high accuracy. But using this method requires a very detailed system model that can fully reflect the mechanical and electrical features of the whole system. Another drawback is that this method requires precise parameters of power electronic converters and detailed grid operational parameters. And because of the confidentiality of commercial wind turbines, it is often very difficult to obtain these parameters.

B. Frequency Scanning Method

The frequency scanning analysis method is an approximate linearization method. The frequency-impedance characteristic of a complex system is obtained by continuously injecting different frequencies of current at the generator side to screen out the system operational mode with potential resonance threats [19].

Frequency scanning analysis method is simple and effective, it is a common method for analyzing SSO [21], [40], and is especially suitable for obtaining the impedance characteristics of a VSC-HVDC system with a complex structure [26]. However, this method is limited by the scan step and the obtained impedance characteristics may not be accurate enough at some frequencies. Therefore, the frequency scanning analysis method is often combined with other methods for further checking.

C. Complex Torque Coefficient Method

The complex torque coefficient analysis method is a combination method of eigenvalue analysis and frequency scanning analysis. The electrical and mechanical characteristics of wind turbines are analyzed separately in this method, and the electrical and mechanical complex torque coefficients can be calculated by scanning the frequency.

The complex torque coefficient method is particularly suitable for the analysis of STO in wind turbines [41], [42]. It can be used to analyze the impact of different parameters on oscillation, and is helpful to the design of a damping controller [43]. This method is also used in the analysis of SSO [44]. The assumptions and simplified conditions in the modeling process have a great influence on the accuracy of the established model.

D. Time-domain Simulation Analysis Method

The time-domain simulation analysis method first establishes the equivalent model including wind turbines, power electronic devices and power grid components, then solves the differential equations describing the whole system step by step by using a numerical integration method, obtains the time-domain curves of the variables, and then analyses the dynamic characteristics of the system by observing the curves [18].

This method is suitable for analysis of various oscillation problems, and the intuitive curves of the variables can be obtained with time. However, this method cannot provide effective information on the mechanism of the oscillation, so it can only be used as a simulation verification for other analysis methods.

E. Impedance Analysis Method

The impedance analysis method studies system stability by establishing a small-signal frequency-domain impedance/admittance model of power electronic devices. This method was first applied in the research of grid-connected voltage-source converters [45]–[47]. In recent years, its application has been extended to the study of SSO and HFR [31]–[33] caused by wind power [48]–[52] and VSC-HVDC systems [53].

The positive and negative sequence impedance model in a static reference frame or the impedance model in a synchronous reference frame can be obtained by harmonic linearizing [49] or state space modeling [51].

When the obtained impedance model is a two-order matrix, the general Nyquist criteria, Gershgorin theorem [54] or solving zero points of impedance matrix in a certain range [55] are used to determine the stability of the system. When the impedance matrix is decoupled, an equivalent circuit of the system can be obtained, and the stability can be estimated by using the damping stability criterion with intuitive physical meaning [50].

Impedance-based analysis is a simple and efficient method, which divides complex interconnected systems into independent subsystems to model and then determine system stability. However, the neglect of some control loops in the impedance modeling process may affect the accuracy of the analysis, so it is necessary to improve the accuracy of the impedance model by taking the actual operational conditions of the system into consideration.

V. Mitigation Measures of Multi-frequency Oscillation

A. Mitigating STO

Recent investigations on mitigation of STO include two approaches: one is additional damping control, and the other is a virtual inertia controller.

Additional damping control aims to improve stability of the shaft by adding an additional control loop to the original active power controller thus increasing electrical damping [56]. In reference [13], a shaft stabilizer is proposed, which contains electrical damping and electrical stiffness two control loops. And the dynamic characteristics of the wind turbines' shaft can be improved by reasonably choosing an electrical damping coefficient and electrical stiffness coefficient.

A virtual inertia controller is proposed for resonance-caused STO [57]. Its control logic is to check whether the shaft system is resonating or not. If the system is resonating, the additional virtual inertia will be injected into the electromagnetic torque

loop of the wind turbines to change the frequency and deviate from the resonance point. Reference [58] presents an approach of damping control combined with inertia control to suppress STO.

B. Mitigating SSO

Recent investigations on mitigation of SSO in a wind power system primarily include the following measures [59], [60]:

1) Control Strategy and Controller Parameter Optimization of Wind Turbines

Optimizing the key control parameters and control strategies of wind turbines that affect oscillation can prevent the occurrence of SSO from being the root cause. Reference [61] proposed SSR suppression measure to adjust the control parameters of DFIG converters. Reference [8] optimizes the converter control parameters of PMSG and solves the sub-synchronous instability problem. This approach is the most cost-effective one as there is no need to invest any new hardware, nor modify the existing control block.

2) Adding an Additional Damping Control Loop in the Wind Turbines' Converters

The sub-synchronous damping control loop can be added to the wind turbines' converters to suppress SSO by using the converters' own control capability. This approach has the advantages of simple structure, flexible configuration and cost-effectiveness.

The design of a sub-synchronous damping controller can be summarized in the following steps: 1) Select the control input signal; 2) Select the location of the output signal; 3) Determine the structure and parameters of the controller.

The controller can be designed in many ways according to the different control input signal and position of the controller. Researches [62], [63] show that the best suppression effect can be achieved by adding a sub-synchronous damping controller in GSC with the series compensation capacitor voltage as a input signal, while in [64], oscillation is suppressed by adding a notch filter in the RSC current control loop.

3) Flexible Transmission System and its Damping Controller

1) Using Flexible AC Transmission Systems (FACTS) Devices

Installing FACTS devices are commonly used to suppress SSO. FACTS devices can be divided into a series type and a parallel type.

Commonly used series FACTS devices include Thyristor Controlled Series Compensation (TCSC), Gate-controlled Series Capacitor (GCSC), Static Synchronous Series Compensator (SSSC), etc. The suppression principle of series FACTS devices is to change the circuit parameters and electrical resonance frequency. This measure can effectively suppress SSO, but the structure of series FACTS device is not flexible enough and the equipment is expensive.

Commonly used parallel FACTS devices include Static Var Compensator (SVC), Static Synchronous Compensator (STATCOM), Unified Power Flow Controller (UPFC), etc. The suppression principle of parallel FACTS devices is to add a damping controller in the control loop of the device. Compared to a series FACTS device, a parallel FACTS device has a flexible structure, but its ability to suppress SSO is limited [60].

2) Using VSC-HVDC

When SSO occurs in a wind farm directly connected to VSC-HVDC, oscillation can also be suppressed by adding a damping controller to the sending-end converters of the VSC-HVDC, and no additional equipment cost is required. Depending on the position of the added additional damping controller, there are three control methods: bridge arm virtual resistance method, resonant voltage compensation method, and harmonic circulating current suppression method [29].

It is more effective with the solution for VSC-HVDC if the VSC-HVDC plays a major role on the deterioration of system stability.

4) Other Measures

In the actual operation of projects, in addition to the measures mentioned above, temporary measures such as cutting off the wind turbines or bypassing the series compensation capacitor will be implemented after the occurrence of oscillation. These measures are simple and effective, but they cannot fundamentally solve the problem, and can only be used in emergency situations.

C. Mitigating HFR

In order to suppress the HFR of the wind turbines, passive damping is a relatively simple method, but the increase of damping resistance affects the filtering characteristics of the harmonics, and inevitably leads to additional loss and heat, which reduces system efficiency.

The active damping method has attracted a lot of attention in related research. This method can increase damping to suppress resonance and improve stability of the control system without increasing system loss. The commonly used active damping methods are the virtual resistance method, advanced correction method and dual bandpass filter method [65]. The virtual resistance method replaces damping resistance with a control algorithm in the converters after the equivalent transformation of the passive damping structure, and is widely studied and applied because of its obvious effect, strong robustness, and easy realization. The advanced correction method is to introduce a control loop with negative resonant peak characteristics into the system to offset the positive resonant peak generated by LCL filters. The dual bandpass filter method attenuates the original resonance peak by adding a notch filter directly into the output of the controller.

VI. Conclusion

This paper gives a general overview on MFO problems including STO, sub/super-synchronous oscillation, and HFR caused by integrated wind energy generation. The state of the art has been systematically summarized from the aspects of the oscillation mechanism to analysis methods and mitigation measures. Due to the complicated structure of China's power grid, and with further increase of wind power penetration and continuous expansion of grid interconnections, various influencing factors affecting grid stability are increasingly complicated.

To gain further insights into the MFO problems, future research work needs to be carried out in the following topics:

1) The integration of wind power can lead to multiple oscillations in different frequency bandwidths. Whether various oscillations will occur simultaneously or even interact with each other needs to be further studied and summarized.

2) In current investigations, the mechanism of SSO caused by the interaction between PMSG-based wind turbines and AC weak grids and the wide-ranging propagation of sub-synchronous components in the grid has not been studied completely, and related issues need to be further explored.

3) At present, there are relatively few studies on oscillations in sub-synchronous and high frequency range caused by wind farm integration through a VSC-HVDC system. The HFR caused by a VSC-HVDC system still lacks a complete mechanism explanation.

4) The control of power electronic devices has strong nonlinearity, so it is necessary to find an appropriate analysis method to study the dynamic coupling interaction between power electronic devices and AC/DC hybrid complex grids.

5) The frequency of oscillation caused by wind power integration is diverse, and the oscillation frequency has time-varying features as the system operating conditions or parameters change. It is a major technical challenge to effectively detect and identify the oscillation and then take corresponding mitigation measures in the grid operation.

REFERENCES

[1] National Energy Administration. (2018, Feb.). 2017 wind power integration. Beijing. China. [Online]. Available: http://www.nea.gov.cn/2018-02/01/c_136942234.htm

[2] H. Li, H. W. Chen, C. Yang, et al, "Modal analysis of the low-frequency oscillation of power systems with DFIG-based wind farms," *Proceedings of the CSEE*, vol. 33, no. 31, pp. 17–24, Oct. 2013.

[3] P. He, F. S. Wen, Y. S. Xue, "Impacts of wind power integration on small signal stability and low frequency oscillation characteristics of interconnected power systems," *Automation of Electric Power Systems*, vol. 38, no. 22, pp. 1–10, Nov. 2014.

[4] W. J. Du, J. T. Bi, H. F. Wang, "Small-signal angular stability of power system as affected by grid-connected variable speed wind generators—a survey of recent representative works," *CSEE Journal of Power and Energy Systems*, vol. 3, no. 3, pp. 223–231, Sep. 2017.

[5] C. Lawrence, J. P. Gross, "Sub-synchronous grid conditions: new event, new problem, and new solutions," in *Western Protective Relay Conference*, Washington, USA, 2010, Oct. 19–21, 2010.

[6] J. Adams, C. Carter, S. H. Huang, "ERCOT experience with sub-synchronous control interaction and proposed remediation," in *2012 IEEE PES Transmission and Distribution Conference and Exposition*, Orlando, USA, May. 7–10, 2012.

[7] M. J. Li, Z. Yu, T. Xu, et al, "Study of complex oscillation caused by renewable energy integration and its solution," *Power System Technology*, vol. 41, no. 4, pp. 1034–1042, Apr. 2017.

[8] L. Shuai, R. Sharma, S. Pirzada, et al, "Eigenvalue-based stability analysis of sub-synchronous oscillation in an offshore wind power plant," in *17th International Workshop on Large-Scale Integration of Wind Power into Power Systems as well as on Transmission Networks for Offshore Wind Power Plants*, Stockholm, Sweden, Oct. 16–18, 2018.

[9] J. Lü, P. Dong, G. Shi, et al, "Subsynchronous oscillation and its mitigation of MMC-based HVDC with large doubly-fed induction generator-based wind farm integration," *Proceedings of the CSEE*, vol. 35, no. 19, pp. 4852–4860, Oct. 2015.

[10] J. Lyu, X. Cai, M. Amin, et al, "Sub-synchronous oscillation mechanism and its suppression in MMC-based HVDC connected wind farms," *IET Generation, Transmission & Distribution*, vol. 12, no. 4, pp. 10211029, Feb. 2018.

[11] C. Buchhagen, C. Rauscher, A. Menze, et al, "BorWin1-first experiences with harmonic interactions in converter dominated grids," in *Die Energiewende- Blueprints for the New Energy Age*, Bonn, Germany, Nov. 17 −−18, 2015.

[12] H. Geng, D. W. Xu, B. Wu, et al, "Control and stability analysis for the permanent magnetic synchronous generator based direct driven variable speed wind energy conversion system," *Proceedings of the CSEE*, vol. 29, no. 33, pp. 68–75, Nov. 2009.

[13] C. Zhang, Z. Li, X. Cai, et al, "Stability and control of shaft torsional oscillation for doubly fed wind power generator," *Transactions of China Electrotechnical Society*, vol. 30, no. 10, pp. 301–310, May. 2015.

[14] Z. H. Hao, Y. X. Yu, "Analysis and identification for electromechanical coupling and shaft stability of doubly-fed induction generator," *Transactions of China Electrotechnical Society*, vol. 26, no. 3, pp. 134–139, Mar. 2011.

[15] Z. H. Hao, Y. X. Yu, "Analysis on wind turbine driven DFIG shaft torsional oscillation mechanism caused by excitation control," *Automation of Electric Power Systems*, vol. 34, no. 21, pp. 81–86, Nov. 2010.

[16] S. L. Li, X. Zhang, Z. Xie, et al, "Study on the third harmonic power pulsation in doubly-fed wind power generation system," *Power System Technology*, vol. 34, no. 4, pp. 37–42, Apr. 2010.

[17] Subsynchronous Resonance Working Group of the System Dynamic Performance Subcommittee, "Reader's guide to subsynchronous resonance," *IEEE Transactions on Power Systems*, vol. 7, no. 1, pp. 150–157, Feb. 1992.

[18] Theory and analysis of dynamic power systems, 1st ed., *Tsinghua University Press Co.*, Beijing, China, 2002, pp. 300-303.

[19] Theory and method of subsynchronous oscillation in power system, 1st ed., *Science Press Co.*, Beijing, China, 2009, pp. 70-72.

[20] C. Chen, W. J. Du, H. F. Wang, et al, "Sub-synchronous oscillations in power systems caused by grid-connected wind farms—a survey of mechanism studies," *CSEE Journal of Power and Energy Systems*, vol. 4, no. 4, pp. 495–503, Dec. 2018.

[21] R. Li, Y. Lu, H. L. Liu, et al, "Mechanism analysis on subsynchronous oscillation caused by grid-integration of doubly fed wind power generation system via series compensation," *Power System Technology*, vol. 37, no. 11, pp. 3073–3079, Nov. 2013.

[22] X. R. Xie, X. Zhang, H. K. Liu, et al, "Characteristic analysis of subsynchronous resonance in practical wind farms connected to series-compensated transmissions," *IEEE Transactions on Energy Conversion*, vol. 32, no. 3, pp. 11171126, Sep. 2017.

[23] X. R. Xie, H. K. Liu, J. B. He, et al, "Mechanism and characteristics of subsynchronous oscillation caused by the interaction between full-converter wind turbines and AC systems," *Proceedings of the CSEE*, vol. 36, no. 9, pp. 2366–2372, May. 2016.

[24] H. K. Liu, X. R. Xie, J. B. He, et al, "Subsynchronous interaction between direct-drive PMSG based wind farms and weak AC networks," *IEEE Transactions on Power Systems*, vol. 32, no. 6, pp. 47084720, Nov. 2017.

[25] Y. H. Xu, Y. P. Cao, "Research on mechanism of sub/sup-synchronous oscillation caused by GSC controller of direct-drive permanent magnetic synchronous generator," *Power System Technology*, vol. 42, no. 5, pp. 1556–1564, May. 2018.

[26] C. Q. Yin, X. R. Xie, H. Liu, et al, "Analysis and control of the oscillation phenomenon in VSC-HVDC transmission system," *Power System Technology*, vol. 42, no. 4, pp. 1117–1123, Apr. 2018.

[27] X. R. Xie, H. K. Liu, J. B. He, et al," *On new oscillation issues of power systems,"Proceedings of the CSEE*, vol. 38, no. 10, pp. 2821–2828, May. 2018.

[28] J. Lü, X. Cai, "Controller parameters optimization design for enhancing the stability of wind farm with VSC-HVDC system," *Proceedings of the CSEE*, vol. 38, no. 2, pp. 431–443, Jan. 2018.

[29] J. Lü, X. Cai, "Frequency-domain analysis and design of stabilization controllers for wind farm integration through VSC-HVDC system," *Proceedings of the CSEE*, vol. 38, no. 14, pp. 4074–4085, Jul. 2018.

[30] X. Wang, H. Liu, X. B. Hu, et al, "Analysis of risk and impacting factors of oscillation in wind farms integration via a flexible HVDC system based on equivalent circuit damping stability criterion," *Journal of Global Energy Interconnection*, vol. 1, no. 1, pp. 48–55, Jan. 2018.

[31] Y. P. Song, F. Blaabjerg, "Overview of DFIG-based wind power system resonances under weak networks," *IEEE Transactions on Power Electronics*, vol. 32, no. 6, pp. 4370–4394, May. 2017.

[32] Y. P. Song, X. F. Wang, F. Blaabjerg, "High-frequency resonance damping of DFIG-based wind power system under weak network," *IEEE Transactions on Power Electronics*, vol. 32, no. 3, pp. 1972–1940, Mar. 2017.

[33] Y. P. Song, X. F. Wang, F. Blaabjerg, "Impedance-based high-frequency resonance analysis of DFIG system in weak grids," *IEEE Transactions on Power Electronics*, vol. 32, no. 5, pp. 3536–3548, May. 2017.
[34] S. J. Sun, W. Zhai, X. H. Qu, et al, "Anti-aliasing active damping control strategy adaptable for wide band," *Proceedings of the CSEE*, vol. 35, no. 20, pp. 5310–5316, Oct. 2015.
[35] W. S. Wang, C. Zhang, G. Q. He, et al,"Overview of research on sub-synchronous oscillations in large-scale wind farm integrated system," *Power System Technology*, vol. 41, no. 4, pp. 1050–1060, Apr. 2017.
[36] L. L. Fan, C. X. Zhu, Z. X. Miao, et al, "Modal analysis of a DFIG-based wind farm interfaced with a series compensated network," *IEEE Transactions on Energy Conversion*, vol. 26, no. 4, pp. 1010–1020, Dec. 2011.
[37] L. L. Fan, R. Kavasseri, Z. X. Miao, et al, "Modeling of DFIG-based wind farms for SSR analysis," *IEEE Transactions on Power Delivery*, vol. 25, no. 4, pp. 2073–2082, Oct. 2010.
[38] X. Wu, Y. J. Guan, W. Ning, et al, "Mechanism of interactive effect of RSC parameters in DFIG on SSO and its application," *Power System Technology*, vol. 42, no. 8, pp. 2536–2543, Aug. 2018.
[39] L. X. Wang, L. Cheng, Y. Z. Sun, et al, "A method for evaluating influence of ancillary control on torsional oscillations of DFIG-based wind turbines," *Automation of Electric Power Systems*, vol. 39, no. 5, pp. 34–40, Mar. 2015.
[40] J. Zhang, X. N. Xiao, B. F. Gao, et al, "Mechanism and characteristic study on sub-synchronous control interaction of a DFIG-based wind-power generator," *Transactions of China Electrotechnical Society*, vol. 28, no. 12, pp. 142–149, Dec. 2013.
[41] J. Yao, X. Zeng, J. W. Li, "Shaft oscillation characteristics of grid-connected doubly-fed induction generator-based wind power generation system," *Transactions of China Electrotechnical Society*, vol. 32, no. 6, pp. 123–135, Oct. 2017.
[42] C. Zhang, Z. Li, Q Gao, et al," *Damping effects on torsional oscillation of DFIG drive-chain using different control strategies,"Proceedings of the CSEE*, vol. 33, no. 27, pp. 135–144, Sep. 2013.
[43] Y. Long, J. Liu, W. Yao, et al, "Complex torque analysis of the operating speed's impacts on the torsional oscillation mode of doubly-fed wind turbine generation system," *High Voltage Engineering*, vol. 43, no. 6, pp. 350–358, Jun. 2017.
[44] B. F. Gao, R. Li, D. Y. Yang, et al, "Damping characteristics and countermeasure of DFIG sub-synchronous oscillation," *Electric Power Automation Equipment*, vol. 35, no. 12, pp. 11–20, Dec. 2015.
[45] J. Sun, "Impedance-based stability criterion for grid-connected inverters," *IEEE Transactions on Power Electronics*, vol. 26, no. 11, pp. 3075–3078, Nov. 2011.
[46] L. Harnefors, M. Bongiorno, S. Lundberg, "Input-admittance calculation and shaping for controlled voltage-source converters," *IEEE Transactions on Industrial Electronics*, vol. 54, no. 6, pp. 3323–3334, Dec. 2007.
[47] L. Harnefors, "Analysis of subsynchronous torsional interaction with power electronic converters," *IEEE Transactions on Power Systems*, vol. 22, no. 1, pp. 305–313, Feb. 2007.
[48] Z. X. Miao, "Impedance-model-based SSR analysis for type 3 wind generator and series-compensated network," *IEEE Transactions on Energy Conversion*, vol. 27, no. 4, pp. 984–991, Dec. 2012.
[49] I. Vieto, J. Sun, "Sequence impedance modeling and analysis of type-III wind turbines," *IEEE Transactions on Energy Conversion*, vol. 33, no. 2, pp. 537–545, Jun. 2018.
[50] K. Y. Liao, S. Tao, L. T. Yao, et al, "Study on frequency-domain modeling and time-varying characteristics of DFIG input impedance with excitation under static reference frame," *Proceedings of the CSEE*, vol. 38, no. 16, pp. 4886–4897, Aug. 2018.
[51] H. K. Liu, X. R. Xie, G. Q. He, et al, "Synchronous reference frame based impedance model and stability criterion for grid-connected renewable energy generation systems," *Proceedings of the CSEE*, vol. 37, no. 14, pp. 4002–4007, Jul. 2017.
[52] R. H. Song, J. B. Guo, B. Q. Li, et al, "Mechanism and characteristics of subsynchronous oscillation in direct-drive wind power generation system based on input-admittance analysis," *Proceedings of the CSEE*, vol. 37, no. 16, pp. 4662–4670, Aug. 2017.
[53] J. Lü, X. Cai, Z. K. Zhang, et al, "Impedance modeling and stability analysis of MMC-based HVDC for offshore wind farms," *Proceedings of the CSEE*, vol. 36, no. 14, pp. 3771–3778, Jul. 2016.
[54] Z. Liu, J. J. Liu, W. H. Bao, et al, "Infinity-norm of impedance-based stability criterion for three-phase AC distributed power systems with constant power loads," *IEEE Transactions on Power Electronics*, vol. 30, no. 6, pp. 3030–3043, Jun. 2015.
[55] W. Liu, X. R. Xie, J. K. Huang, et al, "Frequency-coupled impedance model and stability analysis of grid-connected converter," *Automation of Electric Power Systems*, vol. 43, no. 3, pp. 138–146, Feb. 2019.
[56] Z. Xie, H. T. Li, X. Zhang, et al, "Improved doubly fed induction generator drive-chain oscillation restrain control strategy under grid voltage swell," *Proceedings of the CSEE*, vol. 36, no. 6, pp. 1714–1723, Mar. 2016.
[57] I. P. Girsang, J. S. Dhupia, E. Muljadi, et al, "Modeling and control to mitigate resonant load in variable-speed wind turbine drivetrain," *IEEE Journal of Emerging & Selected Topics in Power Electronics*, vol. 1, no. 4, pp. 277–286, Dec. 2013.
[58] X. Z. Xi, H. Geng, G. Yang, "Inertia control of the grid connected doubly fed induction generator based wind farm with drive-train torsion active damping," *Transactions of China Electrotechnical Society*, vol. 32, no. 6, pp. 136–144, Mar. 2017.
[59] X. N. Xiao, C. Luo, K. Y. Liao, "Review of the research on subsynchronous oscillation issues in electric power system with renewable energy sources," *Transactions of China Electrotechnical Society*, vol. 32, no. 6, pp. 85–97, Mar. 2017.
[60] T. Y. Su, W. J. Du, H. F. Wang, "Review of subsynchronous oscillation suppression measures for grid-connected wind farms," *Southern Power System Technology*, vol. 12, no. 4, pp. 60–69, Apr. 2018.
[61] L. Wang, X. R. Xie, Q. R. Jiang, et al, "Analysis and mitigation of SSR problems in large-scale wind farms with doubly-fed wind turbines," *Automation of Electric Power Systems*, vol. 38, no. 22, pp. 26–31, Nov. 2014.
[62] L. L. Fan, Z. X. Miao, "Mitigating SSR using DFIG-based wind generation," *IEEE Transactions on Sustainable Energy*, vol. 3, no. 3, pp. 349–358, Jul. 2012.
[63] H. A. Mohammadpour, E. Santi, "SSR damping controller design and optimal placement in rotor-side and grid-side converters of series-compensated DFIG-based wind farm," *IEEE Transactions on Sustainable Energy*, vol. 6, no. 2, pp. 388–399, Apr. 2015.
[64] H. K. Liu, X. R. Xie, Y. Li, et al, "Mitigation of SSR by embedding subsynchronous notch filters into DFIG converter controllers," *IET Generation, Transmission & Distribution*, vol. 11, no. 11, pp. 2888–2896, Sep. 2017.
[65] PWM converter and its control, 1st ed., *Mechanical Industry Press Co.*, Beijing, China, 2013, pp. 254-271.

Yongning Chi received his B. E. and M. E. degrees from Shandong University, China, in 1995, and 2002, respectively, and his Ph. D. degree in Electrical Engineering from China Electric Power Research Institute, China, in 2006. Since 2006 he has been employed at China Electric Power Research Institute (CEPRI), Beijing, China, where he is the Chief Engineer for Renewable Energy Research Center. His research interests include modeling, control and integration analysis of renewable energy generation.

Bingjie Tang received her B. E. degree in Electrical Engineering from China Agricultural University, China, in 2017. She is currently pursuing her M. E. degree at China Electric Power Research Institute (CEPRI), Beijing, China. Her main research interests include modeling, control, and stability analysis of wind power generation.

Jiabing Hu received his B. Eng. and Ph. D. degrees at the College of Electrical Engineering, Zhejiang University, Hangzhou, China, in July 2004 and September 2009, respectively. From 2007 to 2008, he was funded by the Chinese Scholarship Council (CSC) as a visiting scholar with the Department of Electronic and Electrical Engineering, University of Strathclyde, Glasgow, U. K. From April 2010 to August 2011, he was a Post-Doctoral Research Associate with Sheffield Siemens Wind Power (S2WP) research center and the Department of Electronic and Electrical Engineering, University of Sheffield, Sheffield, U. K. Since September 2011, he has been a professor with State Key Laboratory of Advanced Electromagnetic Engineering and Technology, and School of Electrical and Electronic Engineering, Huazhong University of Science and Technology, Wuhan, China. His current research interests include grid-integration of large-scale renewables, modular multilevel converter (MMC) for HVDC applications, and modeling, analysis and control of power electronized power systems.

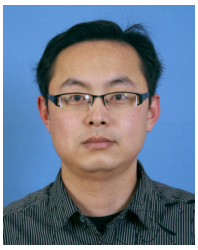

Xinshou Tian received his B. E. degree from Huazhong University of Science and Technology, China, in 2008, M. E. degree from China Electric Power Research Institute, China, in 2011, and Ph. D. degree in Electrical Engineering from North China Electricity Power University, China, in 2016. Since 2016 he has been employed at China Electric Power Research Institute (CEPRI), Beijing, China. His main research interests include wind power generation and power system stability analysis.

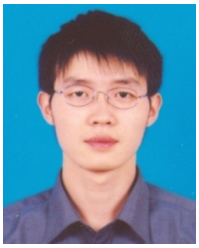

Haiyan Tang received his B. E. and M. E. degrees from Hefei University of Technology, China, in 2000, and 2003, respectively, and Ph. D. degree in Electrical Engineering from China Electric Power Research Institute, China, in 2008. Since 2008 he has been employed at China Electric Power Research Institute (CEPRI), Beijing, China. His research of interests is in modeling, control and integration analysis of renewable energy generation.

Yan Li received his B. S. degree from Shandong University of Technology in 1999, and received his M. S. degree from Fuzhou University in 2002, and received his Ph. D. degree from China Electric Power Research Institute (CEPRI) in 2007. Since 2007 he has been employed at CEPRI, presently as Renewable Energy Integration Planning and Simulation Research Division director of the Renewable Energy Department of CEPRI. His research interests include power system analysis, renewable energy modeling and grid integration simulation, and renewable energy develop planning.

Sujuan Sun graduated from North China Electric Power University, China, in 2005. Since 2005 she has been employed at the State Grid Electric Power Research Institute (NARI group Corporation), Nanjing, China. Her main research interests include wind power generation (such as wide band oscillation, FRT, network adaptability, virtual synchronous Generator, electric drive, energy storage converter control) and generator excitation system (such as Power System Stabilizer, excitation control strategy).

Lei Shi received his B. E. and M. E. degrees in Electrical Engineering from Tsinghua University, China, in 2000 and 2003 respectively. Since 2003 he has been employed at the State Grid Electric Power Research Institute (NARI group Corporation), Nanjing, China. His main research interests include wind power generation, generator excitation system, power system stability analysis, and integration technology.

Lei Shuai received his B. Eng. degree from Wuhan University, China in 2008, and his M. Eng. degree from Aalborg University, Denmark in 2010. He joined Siemens Wind Power, Denmark in 2010. Since then, he has been working as a grid and electrical modeling specialist focusing on power quality and stability in power converter-based systems. He was the solution owner for grid compliance in offshore product platforms from 2016. Since April 2019, he is the Senior Advisory Engineer in Offshore China Technology Center in Shanghai, China.